ECHO IRELAND

IRISH RADIO TRANSMITTERS SOCIETY

Winter 2019 - 2020 88 YEARS

International Marconi Day 2019 at the Hurdy Gurdy Vintage Radio Museum EI0MAR

PATRON **Michael D. Higgins**
PRESIDENT OF IRELAND

Society Officers 2019/2020

President	Jim Holohan EI4HH	086 407 1185	*holohaj2@hotmail.com*
Vice President	Pat O'Connor EI9HX	087 676 7707	*pat@donros.ie*
Hon. Vice-Presidents	Dave Moore EI4BZ	087 629 0574	*davebeag@gmail.com*
Trustees	Seán Donelan EI4GK	01 282 1420	*donelansean@gmail.com*
	Peter Ball EI7CC		*ei7cc.radio@gmail.com*
Auditors	Robert O'Donnell EI5CK		
	Brendan Lynch EI6GA		
Honorary Secretary	Robert Brandon EI5KH		*robert.ei5kh@gmail.com*
Treasurer and Membership			
Records Officer	Dave O'Connor EI6AL	086 100 0000	*dave.ei6al@gmail.com*
			memrecords@irts.ie
AREN Coordinator	John Ronan EI7IG	086 816 7310	*ei7ig@aren.ie*
Automatic Station Coord.	John McCarthy EI8JA	087 943 7500	*johnei8ja@gmail.com*
Awards Manager	Jim Holohan EI4HH	086 407 1185	*holohaj2@hotmail.com*
Awards Curator	Larry McGriskin EI9CN	091 52 6368	*lmcgrisk@iol.ie*
Bainisteoir na Ghaeilge	Seosamh Ó hIarnáin EI3HM		*sohiarnain@eircom.net*
ComReg Liaison	Gerry Gervin EI8CC	087 961 1961	gerrygervin@gmail.com
Contest Manager	Joe Ryan EI7GY	01 285 4250	*contestmanager@irts.ie*
EMC Manager	Brendan Minish EI6IZ	086 250 1832	*ei6iz.Brendan@gmail.com*
HF Manager	Dave Court EI3IO	087 236 7580	*ei3io@connogue.com*
IARU Representative	Dave Court EI3IO	087 236 7580	*ei3io@connogue.com*
IARUMS	Michael Foertig EI3GYB	094 963 1076	*michaelfoertig@eircom.net*
Licence Examination Board			
	Seán Donelan EI4GK	01 282 1420	*donelansean@gmail.com*
	Joe Ryan EI7GY	01 285 4250	*joe.ei7gy@gmail.com*
	Séamus McCague EI8BP	087 259 0691	*seamus.ei8bp@gmail.com*
Chief Morse Tester	Dave Moore EI4BZ	087 629 0574	*davebeag@gmail.com*
PRO	Mark Bannon EI6HPB	086 355 2370	*markbannon100@gmail.com*
Publications			
Coordinator	*Vacant*		
Echo Ireland Editor			
EiNews Editor	Steve Wright EI5DD	087 245 1218	*newsteam@irts.ie*
Radio News Editor	Mark Bannon EI6HPB	086 355 2370	*newsteam@irts.ie*
QSL Outwards Manager	Dave O'Connor EI6AL	086 100 0000	*dave.ei6al@gmail.com*
QSL Inwards Manager	Pat Fitzpatrick EI2HX	087 630 0110	*patfitzpatrick@hotmail.com*
QSL Sub-Managers			
0/1/Calls & SWL	John Browne EI7FAB	087 266 9184	*ei7fab@yahoo.ie*
2 Series	Thos Caffrey EI2JD	087 295 3256	*thoscaffrey@hotmail.com*
3 Series	Pat Fitzpatrick EI2HX	087 630 0110	*patfitzpatrick@hotmail.com*
4 Series	Pat Fitzpatrick EI2HX	087 630 0110	*patfitzpatrick@hotmail.com*
5 Series	Terry Webb EI4GLB	087 619 9943	*terrywebb108@outlook.com*
6 Series	Rory Hinchy EI4DJB		*rhinchy@iee.org*
7 Series	Pat O'Connor	087 676 7707	pat@donros.ie
8 Series	Brian Canning EI8IU	086 251 4822	*brianei8iu@eircom.net*
9 Series	Declan Horan EI9FVB	086 333 6386	*horandx@gmail.com*
Rallies / IRTS Stand	Pat Fitzpatrick EI2HX	087 630 0110	*ei2hxpat@gmail.com*
Social Media Moderator	Anthony Murphy EI2KC		*hamradioireland@gmail.com*
Technical Panel Coord.	Jim Holohan EI4HH	086 407 1185	*holohaj2@hotmail.com*
VHF / Microwave Manager	Joe Fadden EI3IX		*joe_fadden@yahoo.com*
WAI Awards Manager	*see* Awards Manager		
WAI Book Sales	Dave Moore EI4BZ	087 629 0574	*davebeag@gmail.com*
Web Editors	Séamus McCague EI8BP	087 259 0691	*pagemaster@irts.ie*
	Joe Ryan EI7GY	01 285 4250	*pagemaster@irts.ie*
Youth Officer	Brian Canning EI8IU	086-105 7325	*brianei8iu@gmail.com*

Contents

IRTS Committee Members 2019/20

President: Jim Holohan EI4HH
Vice-President: Pat O'Connor EI9HX

Committee

Michael Goss EI2JM
Harry O'Loughlin EI2KL
Steve Wright EI5DD
Robert Brandon EI5KH
Dave O'Connor EI6AL
Gerry Gervin EI8CC
Brian Canning EI8IU
John McCarthy EI8JA
Tom McDermott EI9CJ
Larry McGriskin EI9CN
Declan Horan EI9FVB
Paul Raftery EI9HQB

New Year Address

Happy New Year to one and all and let us remember our Silent Keys and their families who passed away in 2019/2020.

As the new year begins let me apologise for the absence of the Autumn edition of Echo Ireland.
When pillars of our Society, after long years of dedicated service, decide to take a step back from this work, it inevitably leaves a serious void in the critical functions of our Society. While this decision did not come without adequate advance notice, it has been extremely difficult to find a replacement editor for Echo Ireland. That is not to say that some gallant efforts have not been made to produce the Autumn edition. Unfortunately, work commitments, life demands and a steep learning curve conspired to delay the publication.

You will be aware that the Committee has been actively seeking a replacement editor through the IRTS news bulletins and through our sister publication EI News. The fact is that there has been no response to our pleas. Undoubtedly, you will also be aware of the age profile of the Committee and Officers and the consequent urgency to recruit new and enthusiastic people to take on the work of your Society.

Can I appeal to you all once again to double your efforts to engage with your Society in a practical manner and put yourselves forward for nomination to the IRTS Committee and Officer positions. Our 88th AGM will take place on the weekend of the 18th and 19th of April and it would be comforting to know that there is a group of willing members prepared to put their names forward for nomination to the Committee. The IRTS cannot survive or continue to work on behalf of its members without your help and cooperation.

Fortunately, we are temporarily able to produce this edition of Echo Ireland due to the good offices of a kind volunteer whom I would sincerely like to thank.

Athbhliain Faoi Mhaise Daoibh go Léir.

Jim Holohan, EI4HH

President, IRTS

President Visits Clubs

On October 8th I visited the Tipperary Amateur Radio Club in the Clonmel Park Hotel. I received a very warm welcome from all the members. We enjoyed an evening of lively conversation including numerous questions and queries pertaining to the functions and the operations of the IRTS. I was very happy to be offered the chance to give an insight into the workings of the Society and in turn I myself learned something as well. I was also happy to remind the group that any club representative was welcome to attend our monthly meetings. It turned out to be a very enjoyable evening with plenty of refreshments and camaraderie. I was glad I had booked a local B & B!

Early in October I received an invitation from the secretary of the Dundalk Amateur Radio Club, Brian EI8EJB, to attend their combined 50th Anniversary and Christmas celebrations on the 4th of December in their Marconi House club rooms. I was more than happy to accept the invitation as I have had a longstanding friendship with some of the club members. As expected I received a very warm welcome by a packed clubhouse. The event was very well organised with plenty of food, chat and stories. The highlight of the evening for me was when Thos EI2JD showed me the original Dundalk 2 Meter repeater which I had been involved in engineering back in my college days! It was a very enjoyable occasion and a great opportunity to renew old acquaintances and make new ones and to celebrate a very significant milestone.

Shannon Basin Radio Club held their AGM and Christmas party on the 11th of December. Again I was kindly invited to attend. The gathering was very well attended and I was delighted to meet up with so many familiar faces whom I know from Field Days, DXPeditions and past and present members of the IRTS Committee and Officers. Out Vice President Pat EI9HX chaired the AGM after which we were served copious amounts of food, tea and coffee. We explored numerous topics of conversation involving Amateur Radio, the IRTS and plans for the coming new year. Satiated with food and conversation the celebration broke up and we parted looking forward to the festive season ahead.

I would sincerely like to thank the committees and the members of all the clubs whom I visited in 2019. I received a very warm welcome from you all. It was a pleasure to share your generosity, your warmth, your views and your conversation. I enjoyed the experience very much and learned a lot as well. In the coming year I hope to continue to visit clubs and put the names to faces and callsigns. In the meantime let me urge you to support your Society and fellow amateurs in every way you can.

73’s and all the best.

Jim EI4HH.

President, IRTS.

New Licensees, Don't Dismiss CW!

Congratulations to all who have recently passed the theory examination and are now sporting new call signs. You are probably eager to set up a HF station, pick up the microphone, go on the air and start making SSB contacts. Band conditions aren't great at this early stage of solar cycle 25, so I write this article to promote the learning and use of CW.

In 1980, I was issued with the B call-sign EI6AEB. I was not permitted to operate on HF back then until I passed the Morse test at 12 words per minute. I perceived the Morse test as a necessary evil and an obstacle to getting on the HF bands. There was nothing for it but to apply myself and learn the Code. I could benchmark my progress by attending the late Jimmy Upton's (EI8Z) Morse sessions in Fingal Radio Club every Monday evening. One of the other students had a
Datong Morse Tutor and he would set it running in another room, surrounded by our cassette tape recorders recording random five character groups for later practice.

I sat the Morse test at Easter 1981 and was issued with the call-sign EI5EM the following September. I already had an FT101ZD transceiver from my earlier CB days so I set up a G5RV antenna and tuned it with a SEM Z-Match ATU.
However, I wasn't permitted to use the microphone until a year had elapsed!

Back then, on passing the Morse test, there were restrictions for the first year. Only CW was permitted and then only on the 40m and 20m bands, with a maximum power of 25 Watts. Many just sat out that first year without ever going on the air at all and waited until the year had elapsed. I was tempted to do the same but as I had all the gear, I decided to take the plunge and try my CW on the air.

Charlie Lyons (EI2EM) had also just passed the test and had a station set up and ready to go. Both of us would hook up by telephone as we trawled the two bands looking for slow Morse signals. We were ashamed to show our inadequacies by having talkback on two-metres. We would help each other out digging out call-signs, names and QTHs. Having backup increased our confidence and after a while we discovered that we were enjoying CW and could fly solo.

I tried to make at least five QSOs a day and it wasn't long before an enjoyable year on CW had passed. I tried SSB and RTTY for a while but I found that I wasn't getting the same buzz out of it and was frequently reverting to CW. To this day on HF all my QSOs are on CW and I am still enjoying it as much as ever.

I still experience the magic and wonder on hearing my own call-sign coming back to me in response to a CQ call.

CW has many advantages over SSB and some of these are listed below:

- It is much easier to copy weak signals on CW than SSB as the bandwidth is much narrower and filtering (IF, audio and DSP) can be applied to dig them out from the noise.
- CW allows you to make contact with non-English speakers. At the very basic level all you just need is to exchange reports, names and QTHs.
- Being non-verbal, you don't have to contend with accents or mispronunciations.
- Several CW signals can be accommodated in the same bandwidth as an SSB signal.
- Lower power and hence less spectrum pollution is needed for CW to get through. That is why QRP enthusiasm has taken off and why so many QRP rigs and kits are available.
- CW equipment is less complex to make and therefore less expensive. Just look at the plethora of such equipment available on the internet.

CW is a skill and a continuous learning process. Isn't the hobby defined as use of radio for experimentation, self-training and recreation? CW fulfils these criteria for me, as I am constantly trying to increase my speed both sending and receiving.
CW facilitates portable operation with less complex equipment, QRP operation and lighter portable equipment running off batteries.

There are other advantages to those alluded to above. This makes the mode worth serious consideration by new licensees and something worth trying. Having taken the trouble to learn Morse Code, it's a shame to let it go and dismiss it as I once considered doing in 1981.

This article will be worth it if I have convinced some new operators to try CW. You never know …. You might just like and enjoy it!

Best 73 de Tony (EI5EM).

ei5em@eircom.net

South Eastern Amateur Radio Group

The September meeting of the South Eastern Amateur Radio Group took place on Monday the 30th of September 2019 in the Roanmore Social and Sports Centre, Cleaboy Road, Waterford.

If anyone wishes to find out more about the group and our activities you can email us at southeastern-narg@gmail.com or, you would be very welcome to come along to our meetings. See our website www.searg.ie and you can also join us on Facebook and follow us on Twitter.

The next South Eastern Amateur Radio Group meeting will be on Monday the 27th January 2020 in the Roanmore Social and Sports Centre, Cleaboy Road, Waterford at 8.00 p.m. sharp. IRTS President, Jim Holohan EI4HH and Vice-President Pat O'Connor EI9HX will be in attendance. All members are please asked to attend. As always, new members are very welcome to attend also.

The South Eastern Amateur Radio Group wish to remind everyone that are intending to book their hotel rooms for the IRTS AGM 2020 weekend in April 2020 to book them as soon as possible please. Gala Dinner tickets are now available from John EI7IG and on the IRTS webpage. Details about the weekend including room prices and dinner tickets can be found at https://agm2020cw.blogspot.com

TU2R Activity

A group of Belgian operators will be active as TU2R from Abidjan, Ivory Coast on March 23 - April 3rd 2020.

The team will consist of:

Roger ON7TQ
Oliver ON4EI
Ron ON1DX
Jef ON6KX
Kevin in SWL

There will be QRV on 160 - 10 metres in CW, SSB, RTTY, FT4 and FT8.

QSL via Ron ON1DX.

News from around the Clubs

The Shannon Basin Radio Club

The club held its AGM in Hannon's Hotel Roscommon Wednesday the 11th December at 20.00. The AGM was well attended and we were pleased to have the IRTS president, Jim EI4HH, as our guest.

Please see www.sbrc.ie or the club Facebook page for more details.

The club is now running a net on 3.740 plus/minus qrm every Wednesday evening at 20.00. Everyone is welcome to give a call. The 2 meter net is still on every Thursday evening at 20.00 on 145.350.

Skerries Radio Club EI2NCR

The club is in the process of replacing the coaxial cable on their HF and VHF aerials and also checking the poles and hardware making sure everything is winter ready.

Morse code classes will be starting in a couple of weeks. The club meets every Tuesday night from 19:30 hrs to 22:00 hrs in the Sailing club on Harbour Road.

Phoenix Amateur Radio Club

Coolmine Rally

Sunday 16th February 2020

Doors open 10 a.m.

Coolmine Community School,
Dublin D15 FW 97
Contact Tony 087 243 9997

Echo Ireland - Spring 2020

Copy deadline - **1st March**
Articled to *newsteam@irts.ie*

Please read the recommended submission standards at the back of each edition

Shannon Basin Radio Club
IOTA 2019

The club decided at our last AGM that we would try to take part in the IOTA contest as hadn't taken part for a few years. It was decided that we would once again head for Inisboffin (all going well).

In June we put our plans in place and thanks to Enda EI2II we got permission to once again use the school as our shack (and accommodation).

So, Enda filled a van with all the gear and headed over on the 25th, Fr Niall EI4CF also went on the same day.

EI4GGB, EI6GGB, EI6IB, EI4HCB, EI4AGB and EI8IU all met up in Cleggan on the 26th full of anticipation. The crossing over was a bit bumpy to say the least but we all made it to the island where we were met by EJ2II and his now empty van and Ronan EJ8HJ who transported us to our shack.We located our sleeping quarters and then set about putting up the antennas.

We had a windom set up horizontally at about 15 meters, two hex beams at about 10 meters and an inverted vee also at 10 meters.

We were blessed with the wx and got all the antennas up without any rain or strong wind.
After that it was indoors and the two Icom IC7300 were unpacked along with the Acom and SPE Expert linears and the all-important band pass filters. These were eventually all connected up and turned on. SWRs checked, all was well so EJ3Z was on the air!

Laptops were set up and networked by Ej2II and all was ready for the contest the following day.
The plan was to have one SSB station and one CW station. This was working well with conditions relatively good. However, we discovered a problem with the logging software so decided to change the programme we were using. This worked a lot better and things were going well, or so we thought! A windows update started to cause the laptops to freeze and we lost a couple of hours trying to find a fix. Eventually Ronan EJ8HJ came up with a solution and went off to return with different laptops. We got the logging programme installed and off we went again. This time there were no problems and both rigs were busy until contest end.

Pat Shortt was on the island providing some entertainment but the few members who went to see him reckoned that the contest was far more entertaining!

All in all, it was a successful outing with all members having a chance to operate. Throughout the contest our progress was being constantly monitored on the Mainland by Pat EI9HX who unfortunately due to illness couldn't join us.

All the equipment was dismantled, again the wx played its part and we had everything packed back into Enda's van without wind or rain.

On the Sunday evening we all headed for dinner and a couple of drinks to discuss the highlights and of course the lowlights of the contest. We all headed back to our various home QTHs tired but relatively satisfied.

Lessons were learned and next year will be a different story!!

The Shannon Basin Radio Club would like to thank the following for their help,
Celine Mc Cormack and the school committee,
Galway Radio Club,
Ronan EJ8HJ,
Des EI5GT
EI DX Group.

5 MHz News Letter

The following is a list all the countries that currently have an official Amateur Radio presence on 5 MHz, band.:
Andorra, Argentina, Bahrain, Bangladesh, Barbados, Belarus, Belgium, Belize, Bosnia & Herzegovina, Brazil, Bulgaria, Canada, Caribbean Netherlands, Cayman Islands, China, Croatia, Cuba, Cyprus, Czech Republic, Denmark Including the Faroe Islands, Dominica, Dominican Republic, Ecuador, Estonia, Finland, Germany, Greece, Greenland, Grenada, Honduras, Hong Kong, Hungary, Iceland, India, Indonesia, Israel, Italy, Jamaica, Kazakhstan, Kenya, Kuwait, Latvia, Lithuania, Luxembourg, North Macedonia, Malta, Mexico, Namibia, Netherlands, New Zealand, Niger, Norway, Oman, Panama, Paraguay, Philippines, Poland, Portugal including the Azores Islands, Republic of Ireland, Romania, Samoa, Slovakia, Slovenia, Somalia, South Africa, Spain, St Kitts & Nevis, St. Lucia, Sweden, Switzerland including Liechtenstein, Trinidad & Tobago, Turkey, United Arab Emirates, United Kingdom, United States of America & Dependencies and Uruguay.

Given that there are reckoned to be 195 countries in the World (UN) and at the present time of Summer 2019 there is a total of 78 countries currently with a 5 MHz/60m Amateur Radio presence means that 40% - or well over one third of the World - is now active on 5 MHz/60m, with hopefully more to come as administrations gradually adopt the WRC-15 decision in whatever format they are able to .
The use of 5 MHz frequencies in Portugal is only permitted if a special authorisation from ANACOM (the Portuguese telecommunications regulator) is obtained as the frequency band is shared with the military. This applies to both the WRC-15 frequencies and the earlier provided frequency assignments of 5288.5 kHz, 5371.5 kHz, 5380.5 kHz and 5403.5 kHz which are not included in the CEPT privileges applicable in Portugal.

Therefore all stations signing CT7 (mainland Portugal), CT8 (Azores) and CT9 (Madeira) /XXXXX/P are probably not authorised to use 5 MHz unless they have obtained a permit from ANACOM to use the 5 MHz frequencies mentioned above.

Irish Radio Transmitters Society
88th Annual AGM Weekend

Hosted By

The South Eastern Amateur Radio Group EI2WRC

Saturday & Sunday 18th/19th April 2020

Woodford Dolmen Hotel, Kilkenny Road, Carlow

The Woodford Dolmen Hotel, Kilkenny Road, Carlow
Room Rates For AGM Weekend
Fri/Sat, Single including two breakfasts and one evening meal €254
Fri/Sat, Double including two breakfasts and one evening meal €288
Sat, Single including breakfast €139
Sat, Double including breakfast €149
Please use the code IRTS2020 when booking
Hotel Reception 059 9142002

Gala Dinner Tickets will be available once printed €35 per person

For general inquiries about the AGM weekend please contact Sean EI2HZB on 083 4713001 or via email to agm2020cw@gmail.com

Nominations for Office

Under Rule 23.1 of the IRTS Constitution, the Committee shall, at least twenty-eight days prior to the Annual General Meeting, send all paid-up members a list showing the nominees of the Committee for the Offices of President and Vice-President, and also nominees for each of the eleven Committee positions specified in Rule 9.1(c), who are eligible and willing to serve for the ensuing year.

Please submit your nominations to the Honorary Secretary as soon as possible.

88th Annual Irish Radio Transmitters Society AGM Gala Dinner

Saturday 18th April 2020 7:30p.m.

Chef's Homemade Cream of Vegetable Soup

or

Cajun Chicken Salad chargrilled chicken breast with tossed salad, mango & cucumber topped with a spicy mayonnaise dressing

Roast Rib of Irish Beef served with Yorkshire pudding and rich roast gravy

or

Baked Fillet of Atlantic Salmon wrapped in filo pastry with cream cheese asparagus, finished with white wine cream sauce

Deep Filled Warm Apple Pie with vanilla ice-cream

Tea/Coffee

Please note: A vegetarian option will be available and anyone with specific dietary needs are asked to contact the hotel at least 72 hours prior to the event

WRC - 19 Agenda Item 1.1-50-54 MHz Frequency Band in Region 1

The following report has been prepared by Dave, EI3IO in his role as IARU co-ordinator for agenda item 1.1 of the 2019 World Radio communication Conference recently held in Sharm-El-Sheikh, Egypt. Obtaining primary frequency allocations across Region 1 was a major goal of IARU in order that IARU has a seat at the table if in the future the ITU is charged with replanning the former analogue television broadcasting band one, 47 – 68 MHz frequency band.

Introduction

Since the International Telecommunication Union's (ITU) Atlantic City Conference in 1947 there has been minimal access for the amateur service in Region 1 to VHF spectrum below 100 MHz as detailed in Article **5** (Table of Frequency Allocations) of the ITU Radio Regulations. The position has now changed as a result of WRC-19 which arrived at solutions for access to the 50-54 MHz frequency band by the amateur service in Region 1.

This result came after nearly four weeks of negotiations and the detailed consideration of twelve proposals from administrations and Regional Telecommunications Organisations (RTO) around the world. The proposals ranged from no allocation at all to the provision of a 4 MHz primary allocation in common with the situation prevailing in ITU Region 2 and most of ITU Region 3. The IARU position was to seek a harmonised 4 MHz primary allocation in Region 1 in common with other ITU regions.

Pre WRC situation in Region 1

Botswana, Eswatini, Lesotho, Malawi, Namibia, Democratic Republic of Congo, Rwanda, South Africa, Zambia and Zimbabwe 50 - 54 MHz on a primary basis.

Senegal, 50 - 51 MHz on a primary basis.

National usage in a number of Region 1 countries in all or part of the 50 - 52 MHz band on a non interference basis to stations of other primary and secondary services.

Post WRC situation in Region 1

A secondary amateur allocation in Region 1 in the band 50 – 52 MHz is included in the Table of Frequency Allocations in the ITU Radio Regulations.

In Botswana, Eswatini, Lesotho, Malawi, Namibia, South Africa, Zambia and Zimbabwe, 50 - 54 MHz on a primary basis with protection from other services.

In Senegal, 50 - 51 MHz on a primary basis with protection from other services.

In Angola, Saudi Arabia, Bahrain, Burkina Faso, Burundi, the United Arab Emirates, Gambia, Jordan, Kenya, Kuwait, Mauritius, Mozambique, Oman, Uganda, Qatar, South Sudan and Tanzania, the frequency band 50 - 54 MHz is allocated to the amateur service on a primary basis.

In Djibouti and Lebanon, the frequency band 50 - 52 MHz is allocated to the amateur service on a primary basis.

In Guinea-Bissau, the frequency band 50.0 - 50.5 MHz is allocated to the amateur service on a primary basis.

The IARU Team at WRC-19

L to R: Ken JA1CJP, Hans PB2T, IARU Secretary Dave K1ZZ, Bernd DF2ZC, Bryan VE3QN, Flavio PY2ZX, IARU President Tim VE6SH, IARU Vice President Ole LA2RR, Jon WB3ERA, Peter VK2EMR, Uli DK4VW, Murray G6JYB, Dale VK1DSH, Dave EI3IO

In Austria, Cyprus, the Vatican, Croatia, Denmark, Spain, Finland, Hungary, Latvia, the Netherlands, the Czech Republic, the United Kingdom, Slovakia and Slovenia, the frequency band 50.0 - 50.5 MHz is allocated to the amateur service on a primary basis.

In the Russian Federation the frequency band 50.080 - 50.280 MHz is allocated to the amateur service on a secondary basis.

Main Outcome of WRC-19

Final approval of the outcome was delayed until Thursday 21 November as a consequence of extremely sensitive political issues. However following approval:

Pre WRC-19 countries retain their current status in the 50 - 54 MHz frequency band.

The Democratic Republic of Congo removed itself from the list of pre WRC-19 countries.

The amateur service has a secondary table allocation in most of Region 1 in the 50 - 52 MHz band.

44 Region 1 countries have a primary allocation in all or part of the 50 - 54 MHz band.

14 CEPT countries have a 500 kHz primary allocation in the 50.0 - 50.5 MHz band.

The Russian Federation has a 200 kHz secondary allocation in the 50.08 - 50.28 MHz band.

The Final Acts of WRC-19 enters into force on 1 January 2021, however administrations may make provisions to provide 50 MHz spectrum at an earlier or later date.

The amateur service shall not cause harmful interference to stations of other primary or secondary services, with the exception of the pre WRC-19 countries.

Individual amateurs should not use (unless already licensed to do so) the newly allocated spectrum until their national licensing authority has given the go ahead for its use.

Amateurs holding an Irish licence or visiting Ireland

Prior to WRC-19 Ireland was one of the CEPT countries which had authorised national usage in the 50 - 52 MHz band on a non interference basis to stations of other primary and secondary services. In practice little is likely to change in Ireland, although the amateur service with a secondary table allocation in Article 5 of the ITU Radio Regulations (and hopefully the European Common Allocation Table) will now have a higher status internationally in the 50 - 52 MHz frequency band after the entry into force of the Final Acts. Nevertheless Irish amateurs will benefit from the additional stations likely to be authorised as a consequence of the WRC-19 decisions. Our nearest neighbour (the UK) decided to join the footnote which CEPT proposed giving primary status to the amateur service in 50.0 – 50.5 MHz. However UK amateurs already had primary status on a national basis in 50 – 51 MHz.

Next Steps

To address the 50 MHz issue at CEPT's Working Group Frequency Management meeting when the European Common Allocation table is revised.

Excerpts from the HX files

Pat Fitzpatrick EI2HX - Excerpt 047

Hello and welcome to Xtract 047 of the HX Files.
In this issue a mod to a commercial 1.4 GHz aerial and its hardware.

The aerial and its housing seen in photo below came to be a good friend that has supplied me many nice parts over the years and is to shy to have is name in print, so I shall call him the Squirrel.

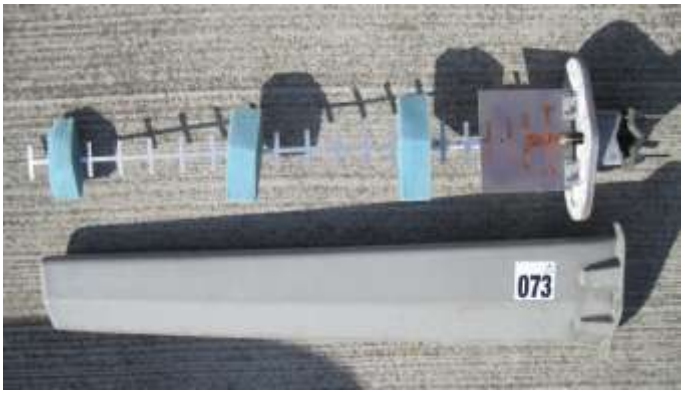

The housing is a sturdy piece of equipment and was made to stand up to all sorts of weather. The plan was to use the aerial and add a 23cms ATV transceiver to the base of the unit and keeping everything inside the housing, originally the unit would have a beam aerial installed, and would have been mounted horizontal onto a mast and rotated to either a horizontal or vertical radiation.

Plan B
Whilst gathering the parts needed for the job I decided to use a vertical aerial (a Slot type) for the project instead of the beam and when finished it would be mounted at the bottom of the garden.

The base of the housing that the original beam was bolted to was a fine solid piece of aluminium block with various cut-outs in it. Some pieces of metal was unearthed from the shed for mounting the main parts on, but before using the metal, a couple of cardboard boxes died before the layout of the final template was decided on and then cut into various shapes and sizes for fitting into the available space, needless to say it was a lot handier cutting the cardboard than the metal, and then trying a few rough layouts of the aerial, transmitter, amp, receiver and coaxial relay.

Making things fit
There is not a lot of room on the base of the mounting block / base of aerial, but there was plenty of room in the height of the aerial enclosure you might be able to make out in the photo of the block that there are a couple of pieces of angle metal riveted to it, so that is were everything would be bolted to.

Whilst the final brackets do not look much, there was some amount of drilling, cutting and a lot of filing involved.

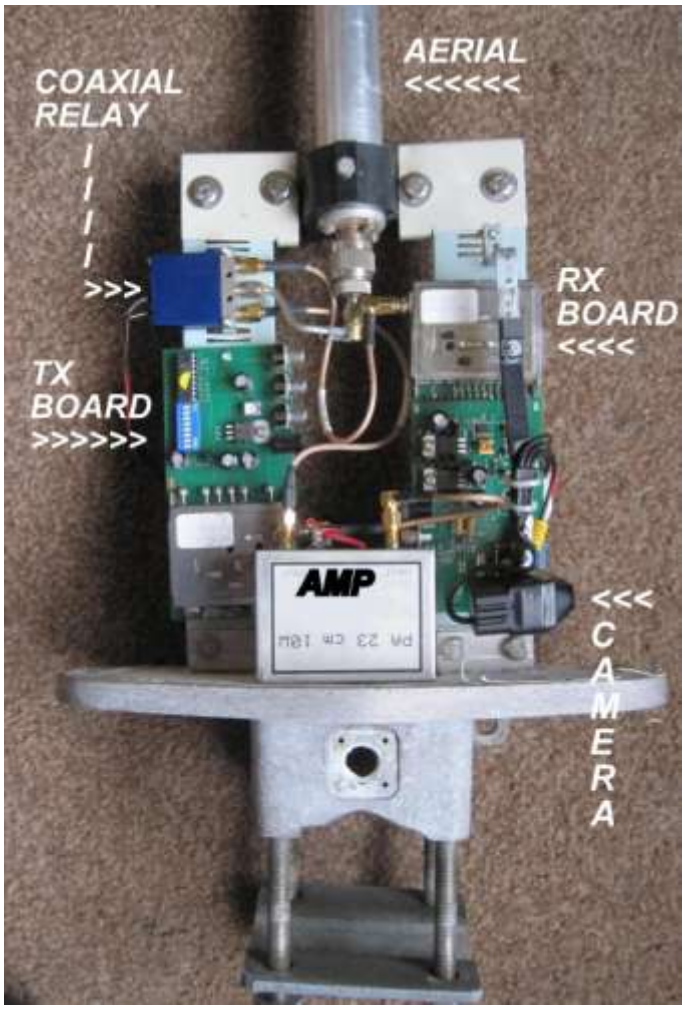

It would be a lot handier to just make one big plate and mount everything to it, but the aerial being used would not allow that to happen as it (the aerial) would be off centre and not allow the aerial to be mounted fully vertical and I would be transmitting directly into the RX and TX boards and that would not do.

You can see in photo above the plastic mounting clamp for the aerial and the rest of the parts mounted below it.

A multi core cable for everything would be run from the house to the transceiver with the tx/rx being switched from a unit in the shack photo (next page) the unit would be used as a test piece so I could tune and adjust some transceivers.

Making it operate, and in use
Wiring it up was not too bad, getting the cable into was fairly straight forward as it originally had a N type connector bolted to the block and when it was removed the opening was more the big enough for the job.

In RX mode only the receiver would have power applied, and a couple of the leads used for audio and vision back to the monitor in the shack. On transmit mode the transmitter, 10 watt amp, coaxial relay and camera would be powered up. For audio and video on transmit mode a camera is mounted inside the unit and it is a nice and small unit and after a couple of minutes with a file the opening was made

slightly larger than the camera lens, and a small piece of Perspex was glued over the holes from the inside, the holes I mentioned are in the housing, put there by the manufacturer for drip holes but as the aerial was now being mounted vertical they would be no good for that function. In the photos you might be able to make out that the aluminium was a bit on the crusty side, so after the unit was mocked up and ran for the first time, it was taken apart and the wire brush was used on the block and the dozen nuts and bolts that held the case to the block as the were also nearly white in colour because of all the corrosion, and some sandpaper used to clean the bolt holes , followed by a couple of coats of spray paint, the case was sealed with a bead of some silicone originally but I haven't done that yet until everything is finalised.

When the unit was powered up for the first time the picture was not what you would call a P5 by any stretch of the imagination. After trying another stand alone receiver I realized that the signal was way to strong, so cover off and a quick snip of a cable and I was down to the dizzy power of 50mw and a P5 picture I guess 10 watts was more than enough to dx from the bottom of the garden to the shack about 17mts away.

And finally
I would like to thank Squirrel for the aerial and the other bits he has given to me, one other item is a nice case witch has a 7 amp power supply and a few leads and external battery pickup (a sort of UPS) and no doubt that will be used as a base station for 13 or 24 cms, but as they say, that's another story.

Until the next time, may all your signals be P5.
73 Pat.

Echo Ireland - the Journal of IRTS

The Irish Radio Transmitters Society, is published quarterly. The Society also publishes **EiNews -** a monthly newsletter**.** Private advertisements from paid-up members are published free of charge.

Articles and event information for publication are welcomed. Send your manuscript to *newsteam@irts.ie* as a word-processing file attachment, **not as a PDF**. Please do not attempt to format the document to look like a printed page. Images and illustrations should be embedded in the file *for position only*. If you do not also send your images as separate high-resolution files, they will not be used. Make sure to put captions for all images and illustrations at the end of the article, rather than embedded within the images or the main text of your article. Please include the full names and call signs of people included in photos and where necessary obtain their permission.

All material published is subject to editing for length, clarity, style, repetition, exaggeration, spelling, punctuation, grammar, legality and taste. Permission may, on their request, be given to other societies to reproduce articles. Matter published or opinions expressed in either publication do not necessarily reflect the opinions or policy of IRTS.

IRTS Shop

IRTS Members can avail of a 10% discount on purchases from the RSGB on-line shop - *rsgbshop.org*. Members should select the **"*Non-member's Price*"** before placing the order and then enter the IRTS Discount Code during the checkout process. At this point the discount will be applied.

IRTS members who are also RSGB members should continue to select the "*RSGB Member's Price*" and not use the IRTS Discount Code.

The current IRTS Discount Code is **IRTS2020XWW—** it will change from time to time.

www.rsgbshop.org

Publications Library

Members are reminded that the IRTS web site has a *Publications Library*, where scanned copies in PDF format of old IRTS publications, principally newsletters, as far back as 1948 are available. This Library forms an important digital record of past society activities.

We encourage members to search for old IRTS publications that are not already on the site and send them to Joe EI7GY for scanning.

New Postcode

Remember to include the new postcode in your address when contacting IRTS
memrecords@irts.ie

Amateur Station Licence Exam

The next Amateur Station Licence Exam will be held on Thursday 7th May 2020 in the ComReg Offices in Dublin and at other centres if warranted by the numbers. See www.irts.ie/exam for full details on how to enter for this exam. This page also includes links to the exam syllabus and other study material.

Please note that it is necessary to download the application form from the web page, forward the completed form and pay the appropriate fee to secure a place for the exam. The closing date for receipt of completed applications is Thursday, 23rd April 2020.

Help for Exam Candidates
We suggest that candidates and tutors should obtain a copy of **Studying for the Harmonised Amateur Radio Examination Certificate**, available on the Downloads page of the IRTS website. www.irts.ie/downloads This document contains:

The exam syllabus – as well as outlining the topics to be covered in the exam, the syllabus includes –

Notes for candidates – designed to assist candidates and their teachers with their work in preparing for the exam by suggesting certain areas worth focusing on; and
Four pages of Annexes – containing key information very relevant to the exam questions.
Sample paper – a useful guide to how the questions are presented in the exam.
Examination Reports – these reports, published by the Exam Board, include observations and advice that should be of assistance to anyone studying for the Licence Exam.

IRTS also provides a **Course Guide** to assist individuals prepare for the exam and to act as a template for those organising classes. See www.irts.ie/course

The IRTS Downloads page www.irts.ie/downloads has a PDF / printable file of the guide, as well as the ZIP file of the browser version (ideal for offline viewing).

The Course Guide headings are as follows:

Section A – Amateur Radio Regulations & Related Topics (30 Questions in total)

- A.1 Licensing Conditions (9 Questions)
  - A.1A ITU Radio Regulations
  - A.1B National Regulations and Guidelines
  - A.1C CEPT Regulations
- A.2 Operating Rules & Procedures (10 Questions)
- A.3 Electromagnetic Compatibility & Transmitter Interference (7 Questions)
- A.4 Safety (4 Questions)

Section B – Amateur Radio Theory & Related Topics (30 Questions in total)

- B.1 Electrical & Electronic Principles including Components & Circuits (8 Questions)
  - B.1A Resistors
  - B.1B Inductors
  - B.1C Capacitors
  - B.1D Impedance
  - B.1E Other Components
  - B.1F Circuits
  - B.1G Alternating Current
  - B.1H Miscellaneous
- B.2 Transmitters & Receivers (6 Questions)
  - B.2A Transmitters
  - B.2B Receivers
- B.3 Feeders & Antennas (7 Questions)
  - B.3A Feeders
  - B.3B Antennas
- B.4 Propagation (6 Questions)
- B.5 Measurements (3 Questions)

Exam candidates who feel they could benefit from assistance with any aspect of the syllabus are invited to contact the Secretary, Robert Brandon EI5KH, who will try to put them in touch with a radio club in their area that may be able to help. See www.irts.ie/contacts for Robert's contact details.

Contests – January 2020

WA7BNM Contest Calendar : RSGB HF Contests : UKEICC Contests : IRTS Contests

Sat 18	12:00	24 hours	Hungarian DX SSB/CW	160-10m, work everyone, serials (+ county code from HA)
Sat 18	13:00	4 hours	RSGB AFS SSB	80-40m, work everyone, exchange serials
Fri 24	22:00	48 hours	CQWW 160m CW	160m, send CQ zone, W & VE send state/province
Sat 25	06:00	36 hours	REF CW	80-10m, work France & French territories, send serial
Sat 25	13:00	24 hours	UBA SSB	80-10m, work everyone, serials (+ Province from ON)
Wed 29	20:00	1 hour	UKEICC CW	80m, work everyone, exchange Locators, e.g. IO63
Every	Wed	60 mins	CWops Mini Contests	160-10m, three separate CW contests

List compiled by Joe EI7GY (All times are UTC)

HADARS 'Green Receiver'

This is a simple project to introduce newcomers to radio - and would make a great present for a young person

RECRUITMENT DRIVE. Members of the Halifax & District Amateur Radio Society (HADARS) were discussing how to bring new members to the club. We agreed that we needed to 'get out there' and show ourselves to the public. However, the outstanding question was what could we do to attract the attention of younger members of society - especially those interested in radio and electronics - and convince them to join our radio club and to gain an amateur radio license?

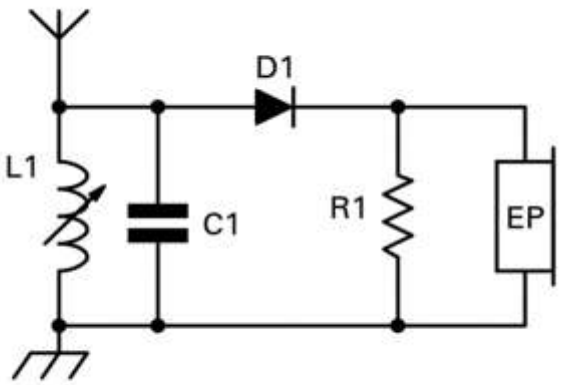

Figure 1

Figure 1

A couple of years ago, HADARS had attended a Halifax Charity Gala and club chairman Martin, M0GQB committed the club to having a display at the 2011 event. But we still needed something to attract interest. Then one of our younger members spoke up - "How about offering a crystal set as a construction project?" Well, he *was a new member and hadn't yet got his license, so we forgave him. But he then made matters worse by saying "...and we could give it away!" After a pause to allow the Yorkshire members of our club to recover from the thought of giving 'owt for nowt', we allowed him to expand his theme: offer a crystal set construction kit by promoting it as green technology, allow members of the public to assemble it on site, then test it with the constructor before sending them on their way with a working radio receiver.*

We discussed it for some time and decided that this could be the "something different" we needed. Although the circuit for a crystal set is simple, there could be problems constructing it as we would be working in a park and offering the kit to people of all ages who didn't know one end of a soldering iron from another. Fortunately, *Practical Receivers for Beginners by John Case, GW4HWR (published by the RSGB in 1996 but sadly now out of print) included a crystal set constructed around a screw connector block. This seemed ideal - provided that we could keep down the cost and avoid draining the club's coffers.*

FLURRY OF ACTIVITY. Over the next few months, the project generated a lot of interest and discussion amongst club members and investigations branched out in several different directions. With time passing and members researching such things as different methods of tuning and zero-bias detectors, the chairman called a halt to things and demanded that the kit design was completed. We settled on using a variable inductance and fixed capacitor to tune the circuit and a crystal earpiece as the output. A field test on the Gala site demonstrated that we could receive up to five medium wave broadcast stations at a reasonable strength using only a 10m long- wire aerial and a counterpoise.

Tuning by altering the inductance ('variable permeability tuning') meant that we avoided the cost of a variable capacitor. We were fortunate in obtaining some pieces of ferrite rod free - we're not revealing our source but hope he will recognise himself and will accept our thanks. Germanium diodes are now quite expensive but a Schottky diode performed just as well and was a lot cheaper!

After searching a lot of electronic company websites, amazon.co.uk turned up a source of cheap crystal earpieces.

TABLE 1: Component list

C1	**100pF disc ceramic**
R1	**33 k (anything from 25-100k is fine)**
D1	**BAT42 or equivalent Schottky**
L1	**approx 70 turns of 30 SWG wire on paper former wrapped *loosely* around 10mm diameter ferrite rod - about 22pH with no ferrite and 300pH with the rod fully in**

The final circuit is shown in **Figure 1** and the component list is as follows.

.

Peter, G4NTA assembled a sample circuit and a wallet to hold all the components. The wallet opened out to reveal separate 'pages' containing information about the crystal set, the assembly instructions, circuit diagram, components list and some general information about aerial and earth connections. This met with members' approval and so the project went ahead.

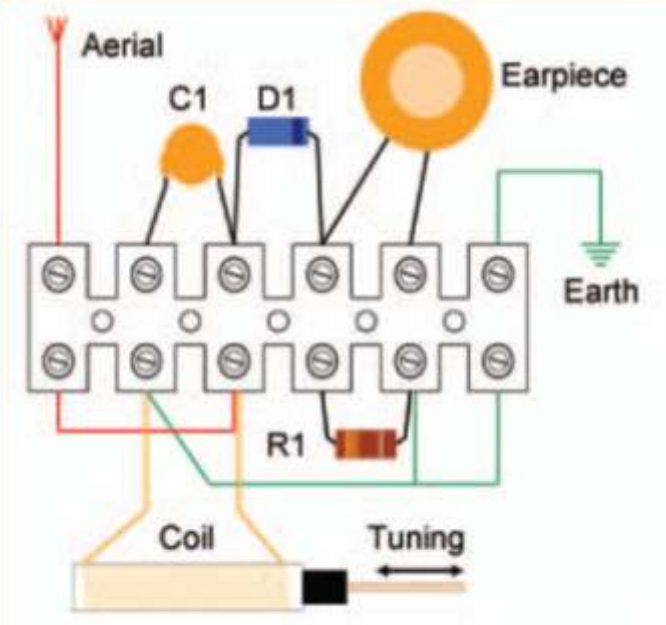

FIGURE 2: Construction diagram of the crystal set (see also Photo 1).

Figure 2 shows the constructional layout of the **PROTOTYPE.**

Peter single-handedly wound twenty coils, cut and folded twenty wallets and assembled and tested twenty kits of components. John, G7ELX came up with an idea for a poster that Martin, M0GQB turned into reality.
We now had something to offer but how would it be received? We had no idea of what reaction to expect but were hopeful.

GALA DAY. The weather on Gala day was good and there was a large crowd of people out to enjoy themselves. Business on our stand was slow but steady throughout the day and we gave away 10 crystal sets, of which 7 were constructed on site. The youngest constructor was 4 and the oldest about 15. The most gratifying reaction was from the 4-year old who was open-mouthed in amazement that something he had created was able to receive "real radio". We also had quite a few enquiries about the club and amateur radio in general and have found several possible ways of reaching out into the community to promote amateur radio.

POST MORTEM. So was it all worthwhile? The answer has to be a resounding 'yes'.

We introduced several people to electronics and radio, had enquiries from potential members and we created a lot of interest and activity amongst club members. This year has shown what we can do and we have to build on this beginning. Will we do it again next year? The chairman says yes - and has plans to repeat the project at other local Galas.
Thanks to RadCom for the kind permission to re-print this article of December 2011, page 30, Volume 87, Number 12.Zac, now M6ZAQ, for proposing the original idea; Peter, G4NTA for his work in creating the crystal set kits.

IRTS QSL Service

Special Event Call Signs

The outwards and inwards QSL service is available free to IRTS members, whether individuals or clubs, for their own call and for special event stations licensed to them.

The service is also available free to JOTA stations, irrespective of whether an IRTS member is the licence holder.

Operators of special-event stations should supply details to the relevant incoming QSL Manager listed on *www.irts.ie* and on the inside front cover of *Echo Ireland*

Notice to Current IRTS Radio News Readers
Mark Bannon EI6HPB

The following information is required in order to establish a private / internal IRTS list of readers and backup readers in each local area.

1. Your name **and** Callsign
2. Are you a regular reader or alternative / backup reader
3. Town **and** County where news is transmitted from
4. Reading via Simplex or via Repeater / Gateway
5. Frequency **and** Mode for news bulletin transmissions
6. Day(s) **and** Time(s) of reading
7. Your Telephone / Mobile phone number
8. Your Email address

Please forward the above details as soon as possible to

markbannon100@gmail.com

IRTS Radio News Bulletin Editor

QSL Inward Manager
Pat Fitzpatrick EI2HX

I wish to advise members that a parcel of QSL cards was received to the P.O. Box that had some water damage. Blurring occurred on the ink on address labels and some cards had been glued together and distorted.
After salvaging the QSL, the cards with details that were possible to decipher will be forwarded to the members.
Unfortunately, some cards were so badly damaged that the EI call signs could not be read. As a result these cards will be returned to the sender so that they can be resent.

FT8 and the D4D Transceiver Kit

Over the last while I've found myself going down a rabbit hole of new radio modes and kits to build. On my journey I came across FT8. As you might already know, FT8 is a relatively new digital radio mode developed by K1JT that lends itself to weak signal communication. The operator sends and receives short messages with basic information: callsign, grid location, signal strength, and finally the usual courtesy "73". The exchange is carried out in 15 second transmit and receive slots. Due to its nature, it can be highly automated, meaning an operator can rack up many QSOs with very little interaction. Indeed, it's because of this that there is a heated discussion among radio amateurs as to whether or not FT8 (and similar modes) can be considered "real" radio. But that discussion is for another day! Today I want to speak a little about my experience building an FT8

transceiver and getting it on the air.

I can't recall exactly how I found it, but I must have been reading up on FT8 to see what the fuss was about when I came across the D4D Transceiver Kit being sold by a fellow amateur in China called Adam Rong (crkits.com). After watching some video demonstrations and checking out reviews of the kit, I decided to purchase a kit for the

20m band. The kit arrived quite quickly and I soon got to work assembling it.

The kit PCB, assembly, and components all seemed to be of good quality (although some colours on the resistors had funny shades, so I verified their values with a testing device). A leaflet came with the kit giving me an overview of the construction and some general advice

Detailed assembly instructions were found on the CRKits documentation website and were very easy to follow. Assembly is carried out on a module by module basis - such as power supply, receiver module, amplifiers, and so on - and at the end of each phase the instructions detailed how to test the section I had just built. In total, the kit can easily be built and on the air within 3 to 4 hours, depending on your soldering skills.

There are some optional modifications that can be made to the kit, and the kit comes with the parts necessary to carry

them out. One such modification is used to reduce intermodulation distortion and resulting spurious emissions, but at the expense of transmission power. The kit is designed in a manner that allows you to come back and add these modifications easily at a later point in time.

When complete, the transceiver is powered off a 12V power supply (not included) and interfaces with your computer's headphone and microphone sockets (audio cables are supplied for this). If your computer is like my laptop and does not have a microphone socket, you can pick up a USB sound card, which plugs into a USB port and has a socket each for headphones and a microphone.

According to documentation, the transceiver puts out about one watt of power (and approximately half that when the IMD modification I mentioned above is added),

so this is a QRPp setup. For me, low power transmissions are a fundamental part of my interest in radio: it's easy to whack your power up to 100W and talk to almost anyone you want, but the real challenge and draw for me is building something that intentionally puts out a weak

signal and seeing who can hear you.

So, who *can* hear you? Like I said, FT8 is great for low power transmissions. It's a slow transmission: each message has up to 13 characters, with one character transmitted per second (the remaining two seconds in the 15 second slot are used to give a little leeway for transmissions that don't start exactly on time). This results in a higher signal-to-noise ratio, meaning that the low-power signal can be more easily picked up in the background noise. With my one watt of power, I have completed QSOs across Europe. Using the website pskreporter.info I can see that my signals often reach

as far as Canada and the United States: I find that reasonably impressive for a QRP transceiver that fits in the palm of my hand! I'm hoping to complete full transatlantic QSOs in the near future. I initially started with a halfwave dipole antenna, but I reconfigured this to an inverted-V to raise the feedpoint a bit farther off the ground: this immediately improved the received signal strength from other transmitters.

There is also a small online community on Facebook and on groups.io for users of this transceiver, where people chat about the construction and operation of the radio. On this community there is a friendly contest to see who can make the farthest QSO. The current record is 13,499km from South China to the east coast of the US on 20m, using a halfwave end-fed antenna, with half a watt of power. Now *that's* impressive!

Do I like the D4D Transceiver? Absolutely. In fact, I purchased a second one a couple of weeks later. The new transceiver is for 40m and I'm playing with it as I write this. Earlier today, I modified my antenna: I added a pair of 14MHz traps and extended the antenna to cater for 40m, too. Current propagation conditions are very poor so I need to spend some more time experimenting before I can reach final conclusions on my new setup!

You might ask: why not just use a regular transceiver for this, instead of assembling kits? This is a very fair question. It's not necessary to have a specialised transceiver for this: if your own transceiver has a VOX feature and can plug into your computer's audio sockets, then you can start using digital modes, too. However, I just like building things! I like turning a bag of components into something functional that can be heard around the world.

Even if you don't consider FT8 to be "real" radio, it's proving to be a very valuable learning tool for me. As a direct result of using FT8, I've learned a lot about propagation and how it can change every, very quickly. I've learned about making adjustments to my antenna to improve transmission and reception. And, as I'm sure we all do, I've been exploring how to construct useful antennas with limited space!

The D4D Transceiver Kit is sold by Adam Rong BD6CR via crkits.com and other distributors. It's priced reasonably at about €35, plus extra for shipping. I obtained the antenna traps from www.sotabeams.co.uk.

Date for your Diary

Ham Radio

45th International Amateur Radio Exhibition
www.hamradio-friedrichshafen.de

NOTA Norway 2020

Nordics On The Air in Norway Easter 2020 – a YOTA sub-regional ham camp – open for all youngsters

This year, the annual **Nordics On The Air** ham youth camp will be held in Norway during Easter, the 10th-13th of April 2020. We invite all the Nordic youngsters to take part in a fun weekend full of radio related activities, meeting new friends and having a great time! Since this is a sub-regional YOTA camp, we have a few seats reserved also for you outside of the Nordic countries!

What will we do?

The program is mainly centred around amateur radio activities, introducing newcomers to the hobby as well as advanced exercises for seasoned radio amateurs. In addition to get the opportunity to go on air from the LA1YOTA station the program also includes an Intercultural Evening – one of the most beloved activities known from former annual Youngsters On The Air events. Do you want to advance your knowledge about the hobby? What about operating LA1YOTA? If that sounds exciting we encourage you to join us!

Where?

The event will take place in Camp Killingen, Killingsholmen, an islet south-west of Oslo. The campsite is on the south side of the islet where we are mostly to ourselves, surrounded by nature.

We want you to come!

NOTA is a camp *for* youngsters *by* youngsters. You all are welcome to join us. If this is your first youngster activity in the hobby we especially encourage you to apply and also if you have never been to a NOTA or YOTA sub-regional camp before! You **don't need to** already have an amateur radio license, just be enthusiastic about the hobby! The goal of camps such as these is to activate youngsters in the sub-region. Please note that we prioritize participants under 26 years of age.

Applying through your own IARU member society

The application to participate has to go through your country's member society (e.g. SRAL, SSA, NRRL, ÍRA, EDR). Applications are accepted from January 9th to February 9th. The amount of attendees is limited, so we recommend contacting your member society quickly if you are wondering whether to participate! If you are not yet a member, now is a good chance to join! 1 Some of you might be contacted about NOTA by your association.

Please contact your national member society for applying.

Fees and further info

There is a symbolic participation fee of 20 euros / 200 NOK including all meals and accommodation. We recommend participating members' societies to cover their participants' travel costs.

More detailed info will be sent to the participants soon after the application deadline. With any further questions, please contact us at nota@nrrl.no .

Stay tuned!

73, we hope to see you in April!

The Nordic NOTA organizing team

1 *About International Amateur Radio Union (IARU) member societies*

IARU member societies in the Nordic countries are:

Denmark: EDR, edr.dk

Faroe Islands: FRA, fra.fo

Iceland: ÍRA, ira.is

Norway: NRRL, nrrl.no , e-mail: yota@nrrl.no

Finland: SRAL, sral.fi , e-mail: nuoriso@sral.fi

Sweden: SSA, ssa.se , e-mail: youth@ssa.se

All other IARU member societies worldwide can be found at iaru.org/member-societies.html . See the web page of your home country's association on how to join it. Youth memberships are usually not costly and IARU member societies warmly welcome you aboard! If you have trouble contacting your association or need any assistance with applying to NOTA, don't hesitate to drop us an email. We'd be glad to help.

Receiver Builder Lab

Louis Ryan EI8KI

What is it?
It is a high performance HF receiver build in discrete blocks allowing you to easily plug in and test your own designs, make a custom receiver, add or subtract your ideas to a known proven design. Full schematics, PCB layout and PCB Gerber files is available.

Why use this?
For years I have been building different type radios. What I really wanted was to be able to test small portions of the new circuits without having to build a complete set.

So, I started to design a 'Lab' (I can't think of a better name but am very open to suggestions) which was of equal receive quality as my most loved radio – a Ten-Tec Omni C. This has the best receiver I have ever used on old or new sets. What I have ended up with is a set that IMHO is better than the Ten-Tec at CW but not even close on SSB. But as I operate almost 100% CW that is fine with me.

All the development work on this was done making PCB's with the Laser Printer Toner Transfer Method and when I was happy with the design a commercial PCB was purchased.

What makes it special for me is each of the components (Bandpass Filter, RF Amp, mixer, crystal filters, IF Amp, audio filters, AF Amplifier, VFO and micro-controller) can be isolated and using mini RF connectors another circuit can

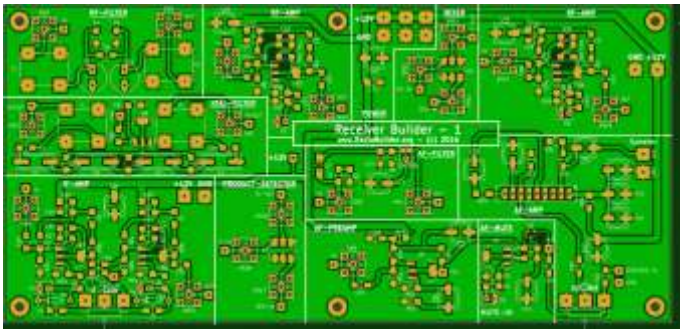

be easily inserted and tested in its place. This allows quick testing of new designs against a known standard. When used in conjunction with the Si5361 based 3 Clock VFO and an RF amplifier (More details on these another day) you end up with a very useful transceiver. The transceiver can be tailored/modified to your needs, it uses common parts and is easily repairable.

For anybody starting out in home brew building a complete radio is daunting. But when starting with a known proven design getting started home brewing circuits is easy.

RF Interconnect
Each of the modules have a SMA RF connector at it's input(s) and output. This allows the use of coaxial gable connections to external test modules. This insures clean signals with minimum interference pick-up or emission. All the RF and IF circuits are designed for the standard RF 50 ohm impedance. This allows easy testing of other 50 ohm components and any circuits that have a different impedance can be easily matched.

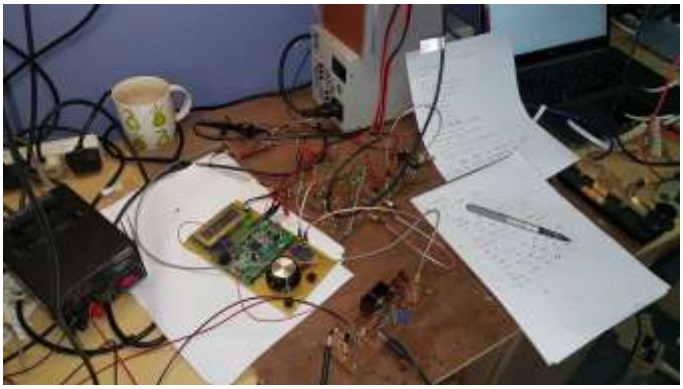

A very early version of the Transceiver with a 5 Watt RF Amplifier

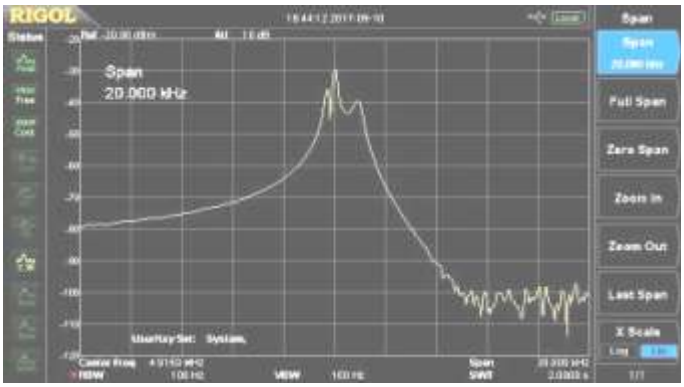

Crystal Filter

The crystal filter was an accidental design. I had some 4.915 Mhz crystals and I prototyped a 4-crystal ladder filter with the intention to add impedance matching at the input and output. When I tested it in a prototype receiver, it appeared to be working very well without any impedance matching. I did not have access to a spectrum analyser with a tracking generator but in real use the design sounded great – if anything it was a bit too narrow. I like to run a wider filter and only very narrow if the band conditions call for it. When I later tested it on a spectrum analyser it confirmed what I was hearing. See filter shape below.

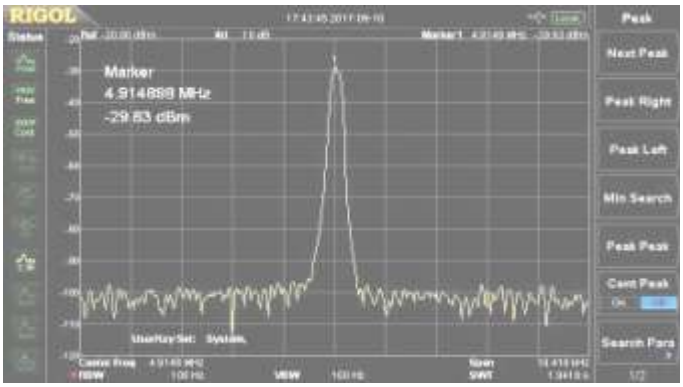

But as I said earlier I do not run such a narrow filter normally as they tend to sound hollow. I really wanted a variable filter. I decided to make a switch-able filter to allow both wide and narrow settings. Doing some basic testing I found that removing the three centre capacitors gave me a wide filter. The plot looks pretty horrendous but it real operation it actually worked OK – not brilliant but good enough. It also allowed me to receive SSB which was an added bonus.

I needed a method to switch the capacitors in and out of the circuit so I added a transistor circuit which could be turned on by applying 12 Volts and off by removing it.

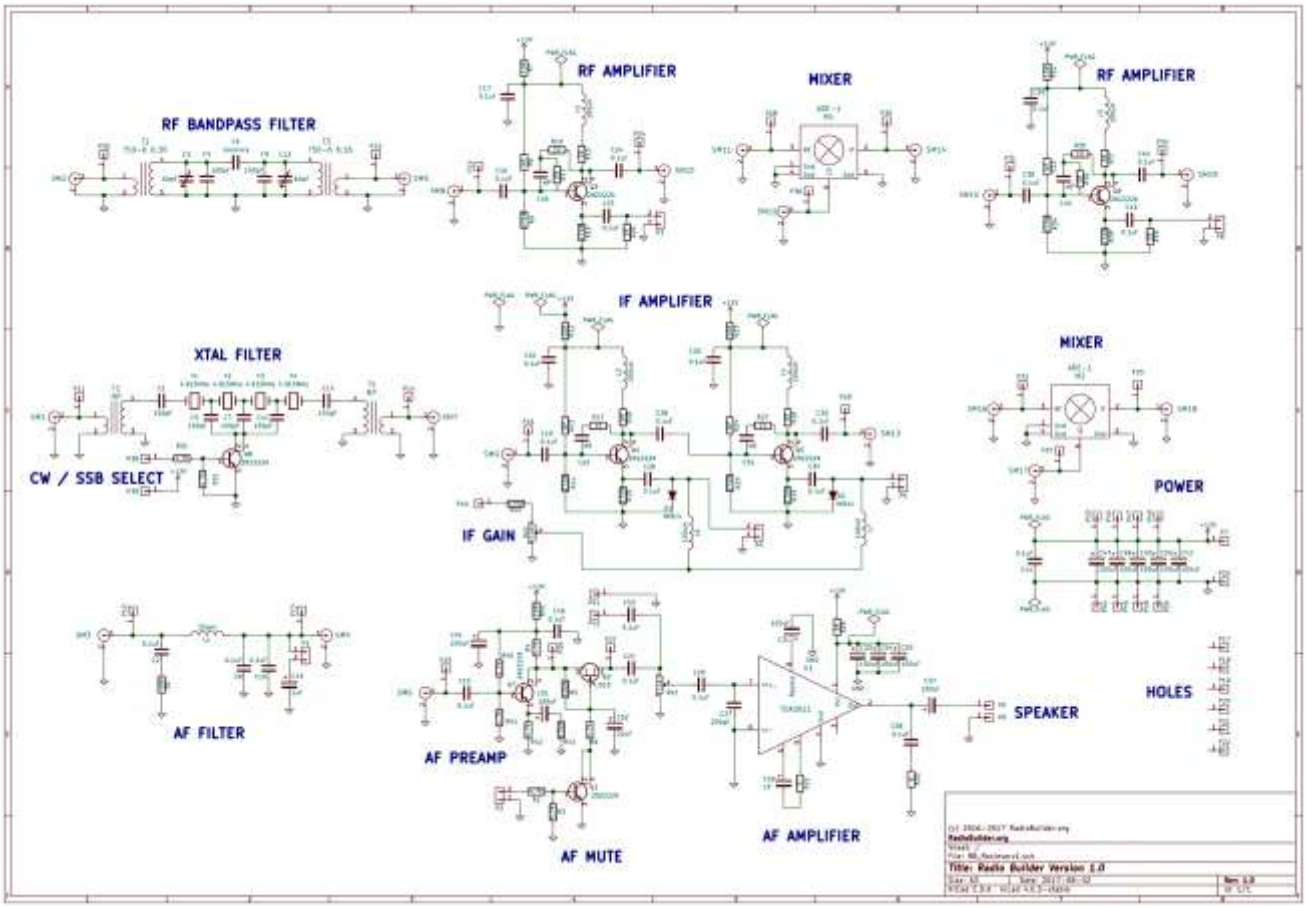

Instead of the capacitors connecting to directly to ground, I connected them to the collector of the transistor. This worked great and allowed me many contacts.
However I still had the problem of the filter being too narrow for my taste when using in normal band conditions. I again did some experiments and found that changing the capacitors to a lower value gave me a wider filter with a good shape.
But I did want a very narrow filter sometimes – so what to do?

It hit me in the shower one morning. If I vary the amount the transistor connects the capacitors to ground, I should be able to vary the filter bandwidth. I added a 10k POT and guess what? It worked! Now I have a wide filter for general tuning, a filter that has a sweet sounding spot for normal CW and a very narrow filter when I need it.
I have seen people use multiple varicap diodes to vary the bandwidth but I have never seen it done with a transistor before. I have to try this on a VFO and see if the varicap can be successfully replaced with a fixed capacitor and a transistor. I can see no reason why it would not work.

The filter worked great and seems to suck the signal out of the noise. I am sure there is a better was of expressing that but that is how it sounds to me. It is hard to describe the sweet sounding spot. It is were the noise seems to disappear and the hollow sound of the narrow filter is not there.

Best sounding filter I have ever heard, but I do admit I am very biased – pun intended :)

The Mixers - RF Mixer
The ADE-1ASK mixers were chosen for a few reasons.
I wanted a mixer that did not overload easily. I have built plenty of sets using the NE602 –SA602/12 and here in Europe on 40m short wave broadcast stations caused them to overload easily. There are a few very powerful AM broadcast stations just above 7.200 MHz and it is impossible to use a RF bandpass filter to filter them out. You can turn the RF Gain down but this in turn reduces the sensitivity of the set or introduces noise.

I wanted 50 Ohm impedance, double balanced and ideally a surface mount that was easy to soldered by hand. The ADE-1 mixer fitted the bill in every area. The disadvantages are a 5dB conversion loss and they need a large local oscillator drive. In a perfect mixer we would get the sum of the local oscillator and the incoming RF signal at the output of the mixer. However in reality we get lots of harmonics and the ports of the mixer are not

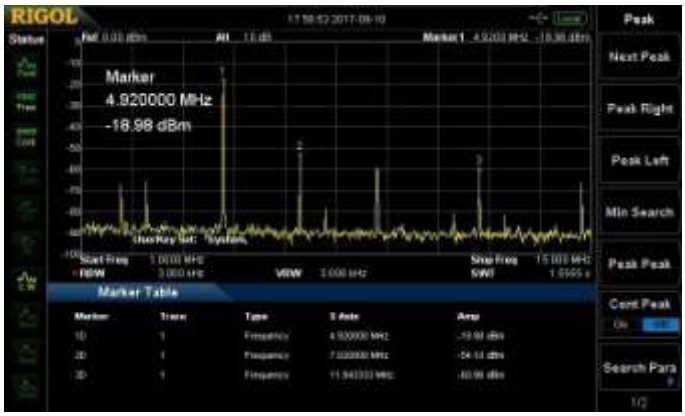

perfectly isolated from each other. See Fig. below.

We have a 7.028 MHz RF input signal, a 11.943 MHz (7.028 MHz + 4.915 MHz) Local Oscillator signal. We do get their difference signal at 4.915 MHz which is the signal we are interested in but we also get many more. The other signals will be eliminated by the crystal filter as it's centre frequency is set to 4.915 MHz.

The signal we are interested in is the difference between the Local Oscillator and the RF Input signal. The correct setting for the VFO is the crystal filter frequency plus the RF input frequency we want to listen to. You could also use the sum of the Local Oscillator and the RF Input signal and if
you were using an analogue VFO this may result in better stability – less drift of your set. However I found I got more “birdies” when using the sum of the two frequencies. This is due to the harmonics and cross mixing of the harmonics causing fake signals at the output port of the mixer.

The conversion loss is slightly greater than what is specified in the data sheet. This is due to the Local Oscillator drive being 3dBm instead or 7dBm. This gives a 7-8 dB loss but is not noticeable by ear and difference between a 3dBm drive and a 7dBm driver so I did not add a driver circuit to the VFO.

The isolation figures are the same as the data sheet. Overall this mixer works very well. The receiver does not suffer overload problems when the IF Gain control is used as there is no AGC. I have never had an RF signal in the home base or portable overload the set so I am quite happy with this choice of mixer.

I have also tested the SBL-1 and home made diode ring mixers in this circuit and they also work perfectly well.

BFO Mixer
The BFO mixer also called Product Detector uses the same part as the RF mixer the ADE-1. In this case the IF input is the same frequency as the crystal filter 4.915 MHz. The Local Oscillator is set to 700 Hz above or below this for CW reception. The mixer outputs the difference between the two frequencies which is 700 Hz the standard frequency for CW reception.

However to match the standard sideband used it in 40 M band it should be set to 700 Hz above this frequency. This will also match the transmitter frequency from the VFO. The BFO frequency can be adjusted if you prefer a lower or higher tone and this adjustment allows you to design Crystal Filters of different frequencies and use / test them in this circuit.

The sum of the two frequencies Local Oscillator and IF also comes out of the mixer plus some harmonics. These are so high above the audio frequency they can be filtered out easily with a simple LC filter.

RF Amplifiers
There are two RF Amplifiers included. There were not exactly designed :) . I wanted a RF block with 20dB'ish of

gain which had 50 ohm input and output impedance. I tried a few calculations but it seemed like there were too many variables to get it to work easily.

I turned to LT Spice. This is a great package provided by Linear Technology (Analog Devices now I believe) which allows you to design and simulate analogue circuits.

Here is how I "Designed" the amplifier.
• I created an input signal, a sine wave of 100 millivolts with 50 ohm impedance.
• I created a 50 ohm load – just a resistor.
• I created a single transistor circuit which had feedback for stability.
• I adjusted (Played) the values of the resistors until the input voltage dropped to 50 millivolts and the output voltage dropped by half when I applied the load.

Here was my logic :

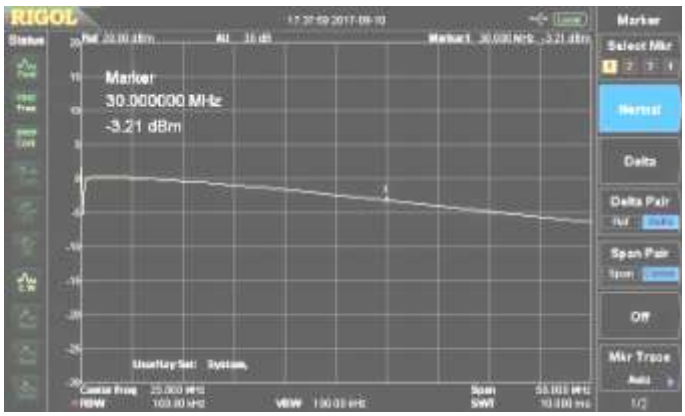

Amplifier Gain is 20dB dropping to approx. 17dB at 30MHz

• If the amplifier dropped the input voltage by half it must have the same impedance as the input.
• If the amplifier reduces the output voltage by half it must have the same impedance as the output.

It seemed to work in practice and gives 20dB of gain.
I then designed (really designed!) the circuit to be flexible.

There are zero ohm resistors and non populate options which allow other types of amplifiers to be substituted.
Capacitor feedback or no feedback amplifiers can be designed and tested in the circuit.

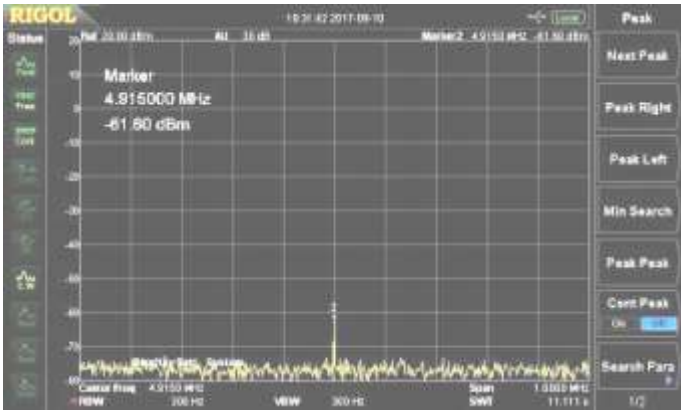

IF Amplifier with 40dB input and gain turned down to zero.

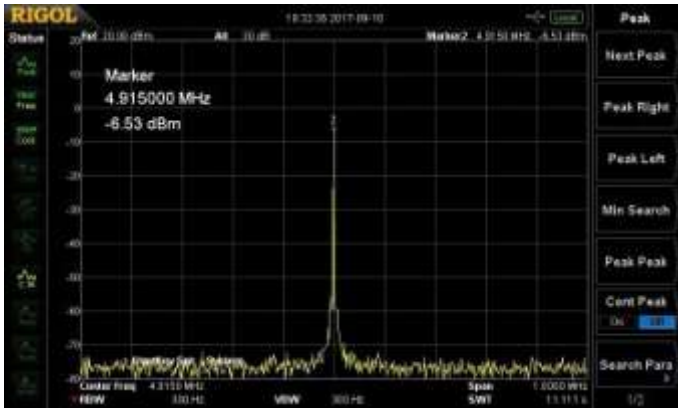

If Amplifier with -40db input and gain turned up fully

If you want a different gain then the zero ohm emitter bypass resistor can be changed giving a new gain.
Variable gain can be achieved by adding a diode for the emitter bypass resistor. See the IF Amplifier for more details on how to do this. In practice the RF Amplifier blocks performs well. It never oscillates and just provided a consistent

IF Amplifier

The IF Amplifier consists of two of the same amplifier blocks used in the RF Amplifier cascaded together.

The only difference is that the gain can be varied. There are two diodes used as variable conductance devices. If there is zero volts at the anode (Capacitor side of the diode) the diodes are turned off and the gain of the circuit is -21.6dB.

As the voltage approaches 0.7 Volts the diode starts to turn on and when the diodes turn on completely the gain of the circuit is 33.5 dB. If a 100 ohm resistor is used for R45 the gain goes up to 37dB but the resistor does get hot!

Similar to the RF Amplifier this amplifier is very stable.

RF Bandpass Filter

The Bandpass Filter is used to select a range or band of frequencies.

The Bandpass Filter consisted of two tuned LC circuits lightly coupled together. Two transformers are used to convert the low impedance 50 ohms to the high impedance required by the LC circuit to provide selectivity. A 'gimmick' capacitor is used to allow the coupling to be varied between the two stages.

The LC is calculated and a fixed capacitor below the value

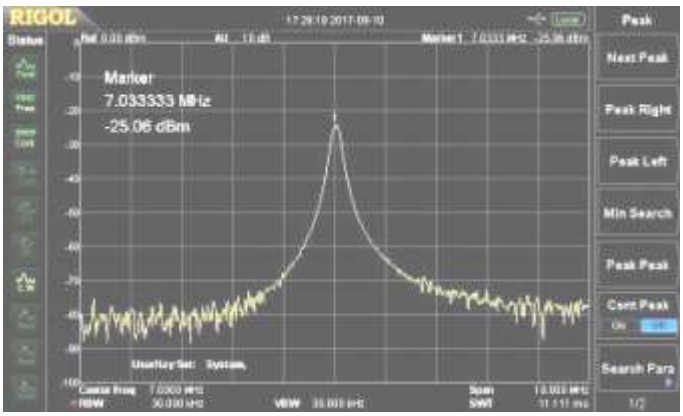

Bandpass filter configured for 40m Band with a -20dB input signal shows only a 5dB loss.

required (ideally 30pf below) is used in the circuit. This allows the trimmer capacitor of 60pf to tune the circuit to the exact value you want. The filter characteristic is shown below.

Audio Amplifier

The audio amplifier is not a LM386!!! I have seen some pretty decent radio designs finished off with a poor audio amplifier. For my ears a high quality audio amplifier is key. You can design every other part of the radio fantastically but if you don't put a good quality audio amplifier the set will never sound good. Ok, I'll stop the rant now.

The amplifier I picked is the TDA2611a IC from Philips. It has a wide voltage range – from 6 to 35 volts. It can deliver 5 Watts of power, enough for casual listening in a large room / shack and most importantly it has a great output sound.

This is a classic design taken from the data sheet with a transistor pre-amplifier providing ample gain.

For use in a transceiver there is an Audio Mute Circuit. This used a FET with a transistor switch to mute and un-mute the audio. There is a capacitor C52 included to ensure smooth transitions between audio pass and mute.

There is also a Side tone input into the audio amplifier. This allows a 700Hz (Or whatever you are having yourself) signal for CW to be input into the amplifier so you can hear your Morse characters as you send them. The volume control varied the volume of the side tone also unlike some other transceivers that I have used. This has the advantage of similar volume for both sent and received CW.

I have used this amplifier for years and am very pleased with it's performance. It sounds great, it just works and it has never failed ... touch wood.

Power

The circuits were designed for 12Volt operation. It will however operate from 9Volts to 14Volts.

There are five 100uF bulk capacitors distributed throughout the board. Each individual circuit has it's own high frequency 0.1uF capacitors for decoupling also.

If a higher value than 100uF was needed the 100uF capacitor was still used. This was simply to reduce the parts variety on the board.

All of the active circuits take their power from the main 12 Volt supply through a RC filter. This prevents any of the circuits 'modulating' the 12 Volt line and interfering with other circuits. The Audio Amplifier would be the main culprit for this so particular care was taken with it's input power circuit.

If I modify this board I would add a protection circuit for over voltage and reverse polarity. To date I haven't blown any but Murphy's Law still applies.

Summary

I have been using this for over a year now and it is the best investment in time and effort I have ever done in the hobby. I have built really good performing superhet, direct conversion and regenerative receivers. I can now test new ideas quickly and easily. I can compare the performance of new circuits with The plug in RF connectors make such a difference. I have had so many on the air contacts and had the real pleasure of using a transceiver designed and build by myself. It is hard to describe the feeling, especially the 1st contact when you have put a set together – one of the best feelings in the world.

If anybody wants a board full plans are (or will be) on www.RadioBuilder.org

I do have a few built boards available and if there is a demand I could get a batch run off. Contact me on (087) 9565295 or irish_guy@hotmail.com

EI DXCC Single Band Status

as at 7th January 2020

Compiled by Joe Ryan EI7GY

		160	80	40	30	20	17	15	12	10	6	2
10	EI2GLB	160	80	40	30	20	17	15	12	10	6	
10	EI2JD	160	80	40	30	20	17	15	12	10	6	
10	EI3IO	160	80	40	30	20	17	15	12	10	6	
10	EI6FR	160	80	40	30	20	17	15	12	10	6	
10	EI7BA	160	80	40	30	20	17	15	12	10	6	
10	EI9FBB	160	80	40	30	20	17	15	12	10	6	
9	EI4DQ	160	80	40	30	20	17	15			6	2
9	EI6IZ	160	80	40	30	20	17	15	12	10		
8	EI1DG		80	40	30	20	17	15	12	10		
8	EI7GY		80	40	30	20	17	15	12	10		
8	EI8IU		80	40	30	20	17	15	12	10		
8	EI9FVB		80	40	30	20	17	15	12	10		
7	EI4BZ		80	40	30	20	17	15		10		
7	EI8GS		80	40		20	17	15	12	10		
6	EI3CTB			40	30	20	17	15		10		
6	EI7JZ			40		20	17	15	12	10		
6	EI9HX			40		20	17	15	12	10		
5	EI4CF			40		20	17	15		10		
5	EI4GJB					20	17	15	12	10		
5	EI4HH					20	17	15	12	10		
5	EI6AL					20	17	15	12	10		
5	EI6JK			40		20		15	12	10		
5	EI9E		80	40		20		15		10		
5	EI9GLB					20	17	15	12	10		
5	EI9JF			40	30	20	17	15				
4	EI3GV					20	17	15		10		
3	EI4GK					20		15		10		
3	EI4GNB					20		15		10		
3	EI5EV					20		15		10		
3	EI6FM					20		15		10		
3	EI6HB					20		15		10		
3	EI7GL			40						10	6	
3	EI8IQ					20		15		10		
3	EI8JX			40		20		15				
3	EI9HQ					20		15		10		
2	EI2II					20				10		
2	EI5IF					20		15				
2	EI7IG					20		15				
2	EI7JN					20		15				
2	EI9CN					20		15				
1	EI3EBB										6	
1	EI3HA					20						
1	EI5FQB					20						
1	EI5GSB					20						
1	EI5KO					20						
1	EI6GI					20						
1	EI6S		80									
1	EI9CJ									10		
		160	80	40	30	20	17	15	12	10	6	2

EI call signs in ARRL's DXCC Listings - Compiled by Joe Ryan EI7GY

as at 7th January 2020

Entries in Bold Type show changes since June 2019

Mixed

357	EI6S
354	EI7CC
349	EI6FR
347	EI8EM
346	EI7BA
336	EI9FBB
334	EI3IO
331	EI5GM
330	EI9O
324	EI2GLB
320	EI4II
313	**EI8IU (+3)**
312	EI6IZ
312	EI8FH
306	EI2HY
306	EI4CF
304	EI2JD
303	EI2CR
300	EI8GS
300	EI9FVB
299	**EI7JZ (+2)**
287	EI9JF
279	EI9GLB
271	**EI4BZ (+1)**
268	EI6AL
263	EI5JQ
262	EI2GX
251	EI1DG
249	EI4HH
248	**EI5GUB (+3)**
244	EI7GY
243	EI6JK
230	EI4GXB
221	EI3CTB
216	EI9E
215	EI6FM
214	EI5IF
210	EI6IL
209	EI7JN
201	EI4IR
193	EI3HA
191	EI6HB
190	EI9CN
189	**EI5EV (+5)**
189	EI9HQ
175	EI7IG
170	EI4GNB
162	EI5FQB
160	EI4GZB
137	**EI5KO (+32)**
135	EI9CF
131	EI5GSB
128	EI8HA
127	EI9CJ
121	EI6GI
104	EI9GWB
103	EI3HDB
101	EI7JQ
101	EI8JB
100	EI3GAB
100	EI4GD
100	EI4HQ
100	EI8KF
100	EI9GGB

CW

344	EI6FR
340	EI7BA
334	EI7CC
321	EI9FBB
309	EI6IZ
305	EI8FH
301	EI2GLB
301	EI3IO
297	**EI8IU (+2)**
293	EI4CF
287	EI2JD
253	EI9JF
252	**EI4BZ (+3)**
248	EI6AL
242	EI5GM
236	EI7GY
227	**EI8JX (+7)**
214	EI1DG
201	EI9FVB
197	EI4HH
180	**EI7JZ (+1)**
169	EI7IG
141	EI3CTB
136	EI9E
127	EI9CF
126	EI4BK
113	EI2KK
113	EI6GI
109	EI2IH
104	EI6HB
101	**EI5EV (New)**
100	EI3KE
100	EI3KG

Phone

354	EI6S
352	EI7CC
347	EI8EM
344	EI7BA
342	**EI6FR (+2)**
324	EI9FBB
309	EI3GV
307	EI3IO
306	EI9HX
300	EI4GK
299	EI8GS
292	EI2GLB
291	EI9FVB
287	**EI7JZ (+2)**
284	EI2JD
284	**EI8IU (+3)**
279	EI9GLB
275	EI4CF
241	EI6JK
225	EI9JF
222	EI4HH
222	EI8FH
216	EI7GL
215	**EI4BZ (+1)**
212	EI6AL
212	EI9E
211	EI6FM
208	EI4GJB
200	EI6IL
191	EI3HA
188	EI2CH
188	EI9CN
186	EI7II
186	EI9HQ
177	EI5IF
177	EI9FE
176	EI3CTB
162	EI5FQB
160	EI2II
160	EI6HB
157	EI4GNB
131	EI5GSB
105	EI1DG
103	EI3HDB
103	EI6GGB
102	EI4DJB
101	EI3IP
100	EI3GAB

RTTY/Digital

307	EI7BA
281	**EI6FR (+11)**
231	EI1DG
228	**EI8IU (+4)**
207	EI2GLB
195	EI8FH
178	EI3CTB
127	**EI5KO (+23)**
121	EI6HB
114	EI8GS
108	EI5IF

160m

253	EI7BA
213	EI3IO
144	EI6IZ
138	EI9FBB
125	EI2JD
119	**EI6FR (+9)**
102	**EI4DQ (New)**
101	EI2GLB

80m

310	EI6S
301	EI7BA
244	EI9FBB
223	**EI6FR (+15)**
171	EI2JD
151	EI3IO
145	EI6IZ
136	EI9E
135	EI2GLB
128	**EI4BZ (+3)**
112	EI7GY
110	EI8GS
106	**EI4DQ (New)**
105	EI8IU
102	EI1DG
100	EI9FVB

40m

320	EI7BA
271	**EI6FR (+6)**
258	EI9FBB
216	EI6IZ
209	EI4CF
208	EI2GLB
206	EI2JD
202	EI3IO
177	EI9JF
157	**EI7JZ (+6)**
154	EI6JK
150	EI8GS
148	**EI4BZ (+1)**
146	EI9E
140	**EI8IU (+4)**
132	EI3CTB
130	EI1DG
128	EI7GY
128	EI9HX
125	EI9FVB
119	**EI8JX (+1)**
117	**EI4DQ (New)**
117	EI7GL

30m

333	EI7BA
276	**EI6FR (+9)**
258	EI9FBB
233	EI6IZ
231	EI3IO
183	EI2GLB
172	**EI8IU (+12)**
167	EI9JF
157	EI7GY
127	EI2JD
122	**EI4BZ (+1)**
118	EI1DG
114	EI3CTB
107	**EI4DQ (New)**
106	EI9FVB

20m

343	EI7BA
340	EI6FR
329	EI9FBB
276	**EI8IU (+5)**
266	EI2JD
261	EI3IO
257	EI9HX
256	EI4CF
256	EI8GS
256	EI9FVB
255	EI2GLB
247	EI6IZ
228	**EI7JZ (+5)**
217	EI9JF
202	EI4BZ
195	EI1DG
182	EI9E
173	**EI8JX (+5)**
173	EI9GLB
171	EI7JN
168	EI7GY
161	EI6JK
154	EI4HH
151	EI6FM
147	EI3CTB
145	EI6HB
144	EI4GJB
139	EI9HQ
138	EI6AL
137	EI9CN
133	EI5FQB
133	EI5IF
130	EI3GV
129	EI4GNB
128	**EI5KO (New)**
126	EI3HA
115	EI7IG
113	EI4GK
112	EI8IQ
108	**EI4DQ (New)**
105	EI2II
104	**EI5EV (+2)**
102	EI5GSB
100	EI6GI

17m

335	EI7BA
308	**EI6FR (+1)**
306	EI9FBB
260	**EI8IU (+4)**
238	EI6IZ
216	EI2GLB
210	EI9FVB
197	EI2JD
171	EI7GY
170	EI6AL
167	EI1DG
164	**EI7JZ (+2)**
162	EI4CF
155	EI9HX
148	EI4HH
146	EI3IO
146	EI9JF
141	EI8GS
127	EI4GJB
125	**EI4BZ (+9)**
121	EI9GLB
114	EI3CTB
108	EI3GV
104	**EI4DQ (New)**

15m

335	EI7BA
316	**EI6FR (+2)**
305	EI9FBB
269	**EI8IU (+1)**
253	EI2GLB
251	EI4CF
249	EI9FVB
232	EI2JD
227	EI3IO
223	EI6IZ
203	EI8GS
202	EI4BZ
199	**EI7JZ (+2)**
193	EI6JK
192	EI9E
190	EI1DG
172	EI9HX
171	EI4HH
168	EI6AL
156	EI7GY
149	EI8IQ
144	**EI8JX (+5)**
139	EI9GLB
137	EI3CTB
136	EI6HB
132	EI4GNB
125	EI6FM
123	EI9CN
120	EI4GJB
113	EI3GV
109	EI7JN
107	EI5IF
106	**EI5EV (+1)**
105	EI9HQ
105	EI9JF
104	EI4GK
104	EI7IG
100	**EI4DQ (New)**

12m

326	EI7BA
282	EI9FBB
226	**EI8IU (+2)**
206	EI9FVB
203	**EI6FR (+8)**
168	EI2GLB
164	EI6IZ
154	EI6AL
151	EI2JD
140	EI6JK
138	**EI7JZ (+4)**
137	EI1DG
128	EI3IO
118	EI7GY
110	EI9HX
109	EI8GS
103	EI9GLB
100	EI4GJB
100	EI4HH

10m

308	EI7BA
284	EI9FBB
262	EI3IO
235	**EI6FR (+4)**
232	EI2GLB
215	EI9FVB
211	EI8GS
210	**EI8IU (+1)**
199	EI2JD
199	EI4CF
186	**EI4BZ (+1)**
180	EI4HH
177	EI9E
174	EI1DG
173	EI6JK
170	EI6IZ
168	EI7JZ
167	EI6AL
144	EI7GL
140	EI6FM
136	EI4GK
135	EI7GY
133	EI8IQ
128	EI3CTB
125	EI9GLB
123	EI4GNB
116	EI9HQ
112	EI4GJB
111	EI9CJ
111	EI9HX
108	**EI5EV (+7)**
105	EI6HB
104	EI3GV
101	EI2II

6m

164	EI3IO
150	EI9FBB
120	**EI4DQ (+20)**
118	EI7BA
111	EI7GL
108	EI2GLB
107	EI2JD
102	EI6FR
101	EI3EBB

2m

153	**EI4DQ (+8)**

DXCC Honor Roll

Mixed

340	EI6FR/349
340	EI7BA/346
339	EI7CC/354
338	EI8EM/347
337	EI6S/357
333	EI9FBB/336
338	EI8EM/347
337	EI7CC/352
336	EI6S/354
332	**EI6FR/342 (+2)**

CW

338	EI6FR/344
335	EI7BA/340

Phone

338	EI7BA/344

DXCC Challenge

2932	EI7BA
2534	EI9FBB
2364	**EI6FR (+54)**
1964	EI3IO
1854	EI2GLB
1840	EI6IZ
1783	EI7CC
1766	EI2JD
1763	**EI8IU (+48)**
1531	EI9FVB
1466	EI4CF
1312	EI1DG
1310	EI8GS
1223	**EI4BZ (+26)**
1201	EI7GY
1200	**EI7JZ (+27)**
1092	EI5GM
1090	EI6JK
1060	EI9HX
1018	EI9JF
1015	**EI4DQ (New)**

The following Silent Keys were holders of DXCC Awards

DXCC Honor Roll

Mixed

336	EI8H/365
331	EI2GS/340

CW

109	EI4HM

Phone

338	EI2GS
331	EI8AR
300	EI8AU
116	EI6CPB
114	EI4EX
105	EI1CS

DXCC

Mixed

365	EI8H
340	EI2GS
116	EI6CPB

Silent Key

John McAndrew EI3JM

It is with the greatest of sympathy that we report the death of John McAndrew, EI3JM, Ballinvoy, Aughagower, Westport , Co Mayo on Monday September 9th 2019.
John operated mostly CW on HF, but he would also be heard on 2 meters FM. John was a valued member of the Mayo Radio Experimenters Network. He was club chairman from 2006 - 2009 and also served as treasurer in recent years. He also acted as the reader of the weekly IRTS News Bulletins on 2 meters on behalf of Mayo Radio Experimenters Network.
He will be sadly missed by all his colleagues in the Club. We extend our deepest sympathies to his wife Kathleen, daughter, sons, brothers and sisters and his extended family.

Ar dheis Dé go raibh a anam Dílis.

Silent Key

Bill Rice EI5FY,

Bill Rice EI5FY, from Galway passed away on 14th July 2019. He was aged 91. He was laid to rest in Aughavale Cemetery, Westport. Bill had lived for a number of years in Westport before moving to Galway, working with CIE.
Bill was a member of Galway Radio Experimenters Club for over forty years and participated in all its events throughout the year. He will be well remembered by his regular attendances of the radio rallies in Ireland and even visited the Dayton rally in USA after he retired. Bill lived in the heart of Galway City and even though housing on all sides surrounded him, he managed to put up a sizable Windom antenna plus 2m collinear. He was quite active on both HF and VHF 2m, plus an avid CW user. His dulcet tone could often be heard on the Galway repeater well into the night, talking for hours to his now also passed away mates, Mike EI2EO and Joe EI4FT. Bill had a soft voice that was instantly recognisable, you could certainly be sure of a very long over and get plenty of advice talking with Bill, a gentleman in all respects. He accompanied the club on their many summer trips to Inishbofin, plus the Connemara hill walks and is well remembered by his cooking skills, his famous stew, much appreciated after a long days work, being voted the club's best chef.
When Bill retired, he purchased a boat for cruising on the Shannon, the 'Estelle". He sailed almost the entire length of the river and lakes but was particularly fond of Lough Erne. He had his radio station on board and would often stop to work HF if a suitable field and tree was spotted. His claim was that he worked every repeater in Ireland from his boat.
Bill had a big welcome and cup of tea for everyone who visited his house. Long afternoons were spent repairing Bill's radios and aerials, as he got older. All the radio manuals were inspected and studied by Bill before attempting a repair. He left nothing to chance. That was Bill for you. EI5FY.

Ar dheis Dé go raibh a anam Dílis.

Silent Key

Brendan de hOra EI3GV

We were saddened to hear of the recent death of Brendan de hOra EI3GV. Brendan was a very active DXer, with more than 300 DXCC entities confirmed, and also participated in a number of DXpeditions. He was a member of South Dublin Radio Club and took a leading part in club contests and other activities. Brendan was Treasurer of IRTS from 2002 to 2005 and, more recently, was one of the society's Honorary Auditors.

Brendan's other interests included hill walking, and he was one of the founding members of The Irish Ramblers' Club in 1964. He used his hillwalking experience to entice some South Dublin Radio Club members to join him on a number of mountain activations, including Lugnaquila and Galtee Mór. Brendan was also an active Worked All Ireland operator, searching out rare squares in the hills.

Brendan was pre-deceased by his wife, Betty, and by one of his sons, and is survived by a daughter, two sons and grandchildren.

May he rest in peace.

Silent Key
Tom Molloy EI8GO

It is with great sadness that we learnt of the death of Tom Molloy EI8GO who passed on Saturday the 21st of September after a short illness. Tom was licensed in 1985 and was chairman of the South Eastern Amateur Radio Group for quite a few years.
Originally from Ballingary, Co. Tipperary, he worked in Eircom all his working life and only retired about 18 months ago.
He was largely responsible, with some other members, for the developments of the groups Packet Radio in the 1990s and programmed the nodes.
In his tenure as Chairman of SEARG, apart from the Packet Radio, the first 2m/70cm repeater was licensed and installed in Waterford.
To his wife, Mary and four children we express our deepest sympathies.

Ar dheis Dé go raibh a anam dílis.

Silent Key
Eddie Lawler EI6GU

The death has occurred of Eddie Lawler EI6GU. Eddie passed away suddenly on the 27th August 2019, at his home in Primrose St Dublin. Eddie was a member of the Fingal Radio Club.
He was well known on the East coast repeaters during the late 80s and 90s. Although not very active in the last few years, he was always willing to help out with parts that were difficult to obtain and had a great collection of older ICs which at times were in great demand by those who enjoyed building projects. IRTS expresses our sincere sympathies to his family.

May he rest in peace.

Charlie Lyons EI2EM

Silent Key
Harry Boyle EI9BW

IRTS would like to extend its condolences to the family and friends of the late Harry Boyle EI9BW. Harry passed away at the age of 89 years, in the care of the staff of Raheny House, Nursing Home.
He was pre-deceased by his wife of 67 years, Kathleen.
He will be sadly missed by his sons John & Brian, daughters-in-law Sharon and Aoife, his extended family and all radio hams. In his later years Harry preferred operating as a shortwave listener rather than transmitting.

May he rest in peace

Silent Key
Dave Hooper EI2HR

IRTS would like to extend its condolences to the family and friends of the late Dave Hooper EI2HR. Dave was a very active operator who made a lot of friends during his much loved time on the air, both using the modes of phone and amateur TV. For the past few years Dave had been suffering from Alzheimer's. He passed away peacefully, with his family at his side, at the age of 89 years.

May he rest in peace

Silent Key
Richard Wilson EI9CC

IRTS would like to extend its condolence to the Family and friends of the Late Richard Wilson EI9CC from Castleknock Dublin and late of Teagasc, NUIM and UCD. Richard passed away on Sunday November 10th in Beaumont Hospital after a short illness.
He will be sadly missed by his wife Penny, Sons, Daughters, grandchildren and great grandchildren
Richard was a founding member of Fingal Radio Club in the 1970's.

May he rest in peace

Silent Key
William McCauley Snr. EI4EK

IRTS has learned of the death of Willliam McCauley Snr. Drumoghillon Donegal, on the 29th November 2019 at the Letterkenny University Hospital. We extend our condolences to his family and friends.

May he rest in peace

Silent Key

Willie Long EI6AI

It is with the deepest sympathy that we report the passing of Willie Long EI6AI. Willie was a good friend to many fellow hams in the community throughout the decades. Willies great wit and humorous ways were enjoyed by his friends and anyone who had the fortune of meeting him.
In the words of his friend and fellow ham Aengus EI4ABB:

"I got to know Willie first when I started going to the radio rallies over thirty years ago. Each time I visited him I
always left with some item for the shack. As I got to know him more, we went to rallies overseas, including Leicester , for many years. Willie first told me about Friedrichshafen in Germany ,which was an eye opener, and became an annual event for myself and my fellow hams from Galway. I also had the great pleasure of visiting Willie at his home QTH, and enjoyed his and Olives great hospitality. Willies great technical knowledge was vast and we spend many hours working on various projects in his shack. There are so many great memories for me and of course all the people who knew Willie over the years."

Our profound condolences go out to his Willies family and friends at this time. Funeral Service was held at The Methodist Church, Dunkineely followed by burial in the Killaghtee graveyard.

May he rest in peace.